USE TYPICAL FLAT SEAM CONNECTORS EVERY 300mm
FOR ALL FLAT SEAMS PER **DETAIL A**

TYPICAL FOR ALL SEAMS HORIZONTAL AND VERTICAL UNLESS SPECIFIED OTHERWISE

USE A MINIMUM OF **2 FLAT SEAM CONNECTORS** ON EVERY HORIZONTAL SEAM

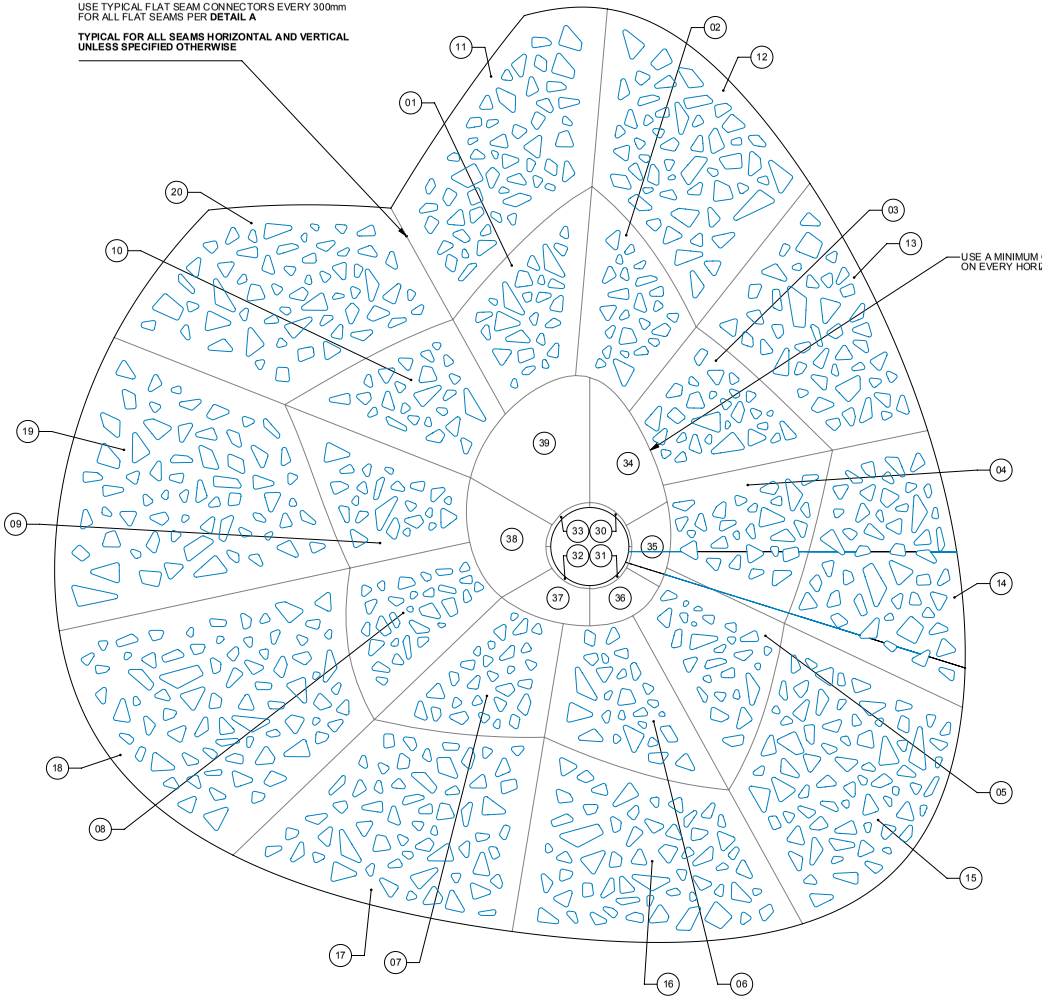

DETAIL A: TYPICAL FLAT SEAM CONNECTION DETAIL:

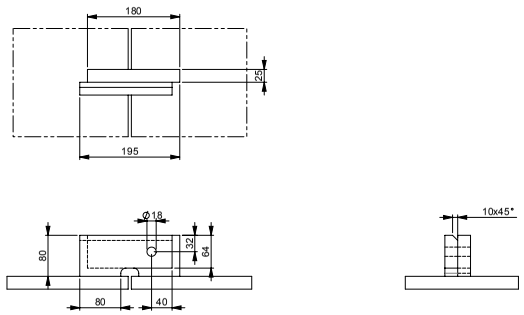

Ref.Nr.	REV.	DATE	DESCRIPTION	APPROVED
	A02	2015-02-16	Added part numbers	RMU
-	A01	2015-02-13	Documentation released	RMU

ROUGHNESS ACC. ISO 1302 in µM: N/A	ISO A	GENERAL TOLERANCES LIN. ± 0.2 ANG. ± 1°	DIM. IN MM
SCALE: 1:1	FORMAT: A1	DSGN: RMU 2015-02-13	DRW: RMU 2015-02-16
CHCK: RMU 2015-02-16			

DESCRIPTION	ARTICLE NUMBER	REV.
TOPSECTION 3A_A02	N/A	A02

SHEET: 10.01 OF 1

DRAWING: N/A